Quantum Flex® X1300/X1400

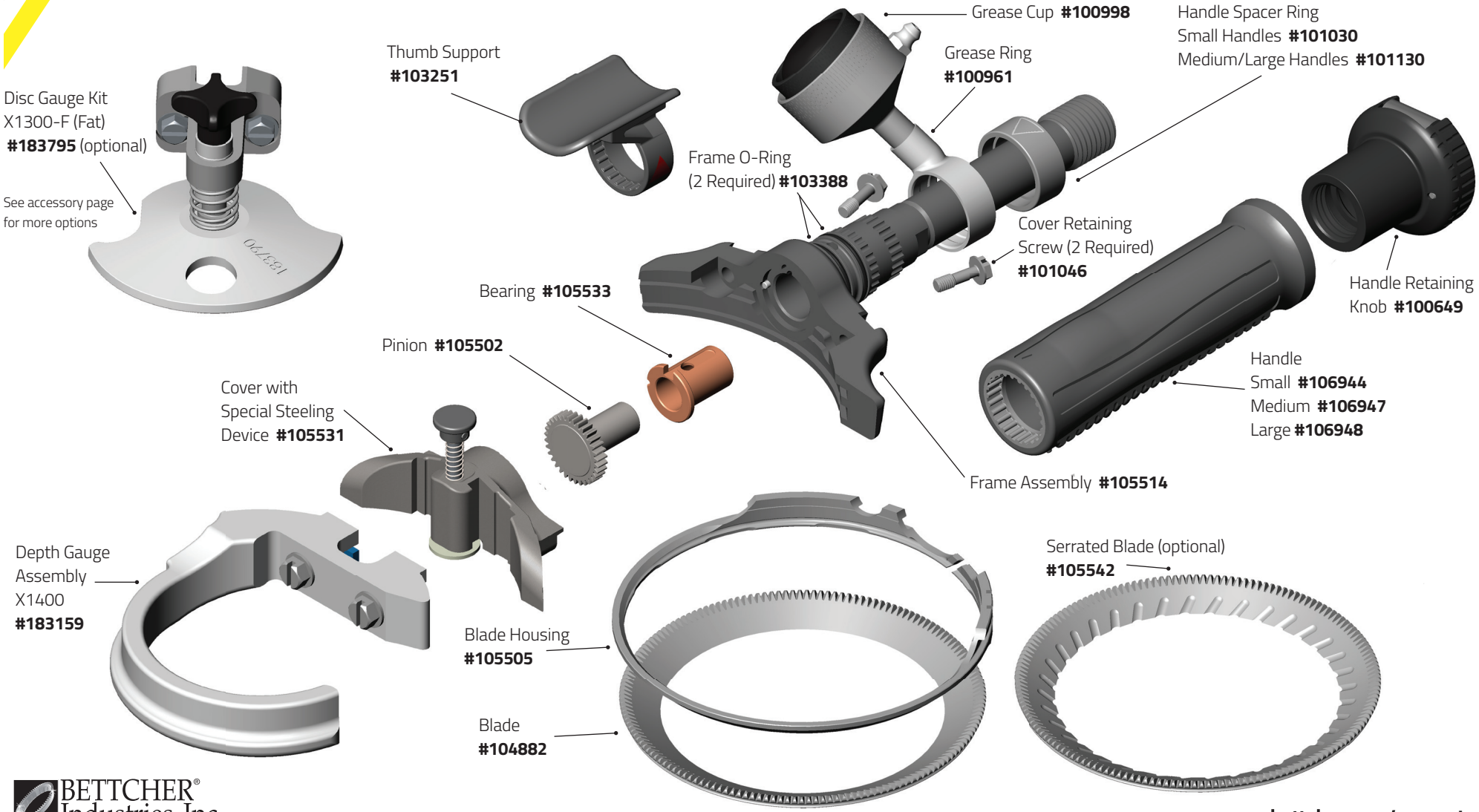

BETTCHER® Industries, Inc.

bettcher.com/support

Quantum Flex and the Bettcher design are trademarks of Bettcher Industries, Inc. U.S. and international patents. ©2018 Bettcher Industries, Inc.

M1091E