Quantum Flex® X1000/X1500

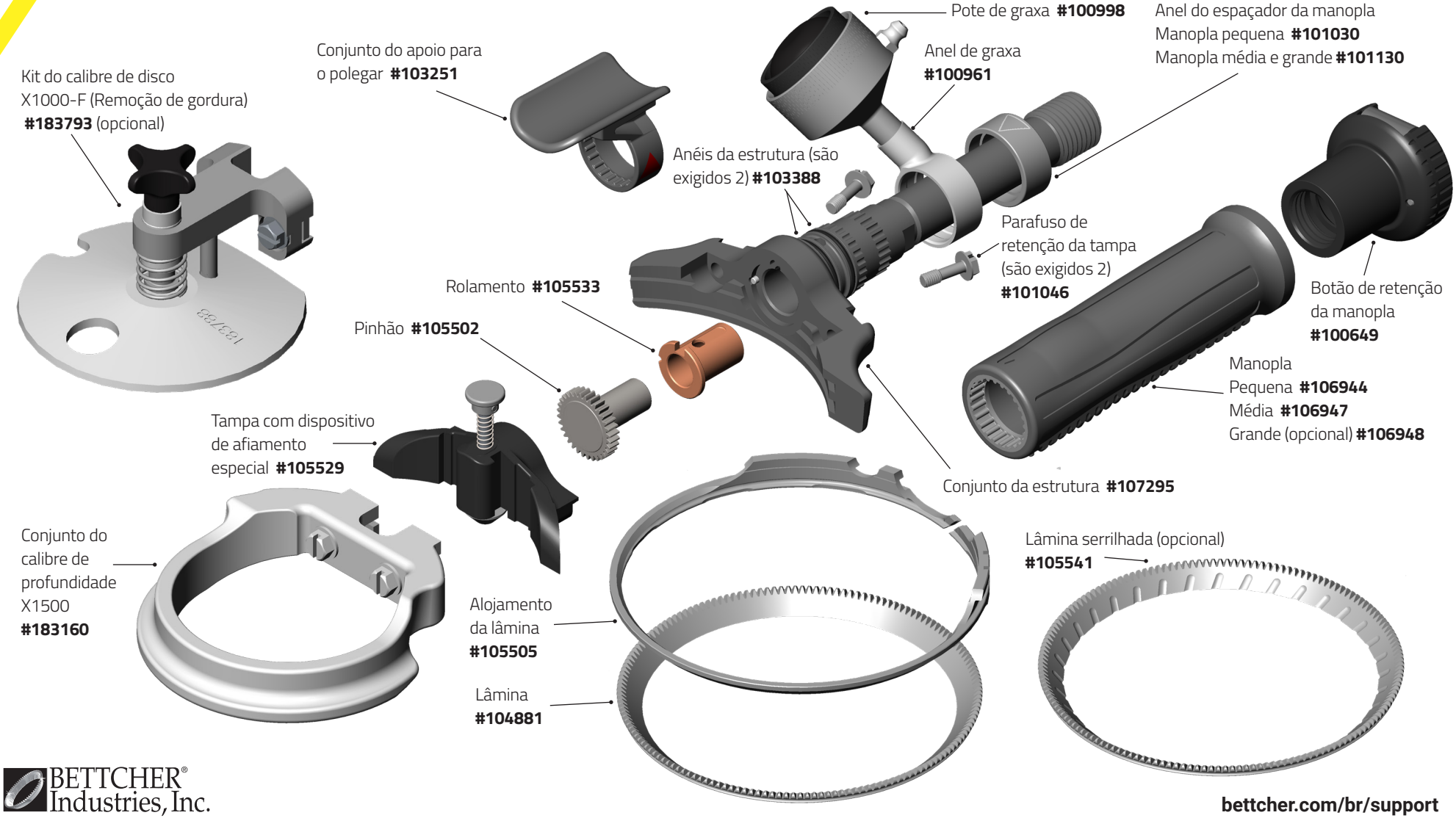

BETTCHER® Industries, Inc.

bettcher.com/br/support

Quantum Flex e o design Bettcher são marcas registradas das patentes da Bettcher Industries, Inc. EUA e internacionais. ©2020 Bettcher Industries, Inc.