Quantum Flex® X564

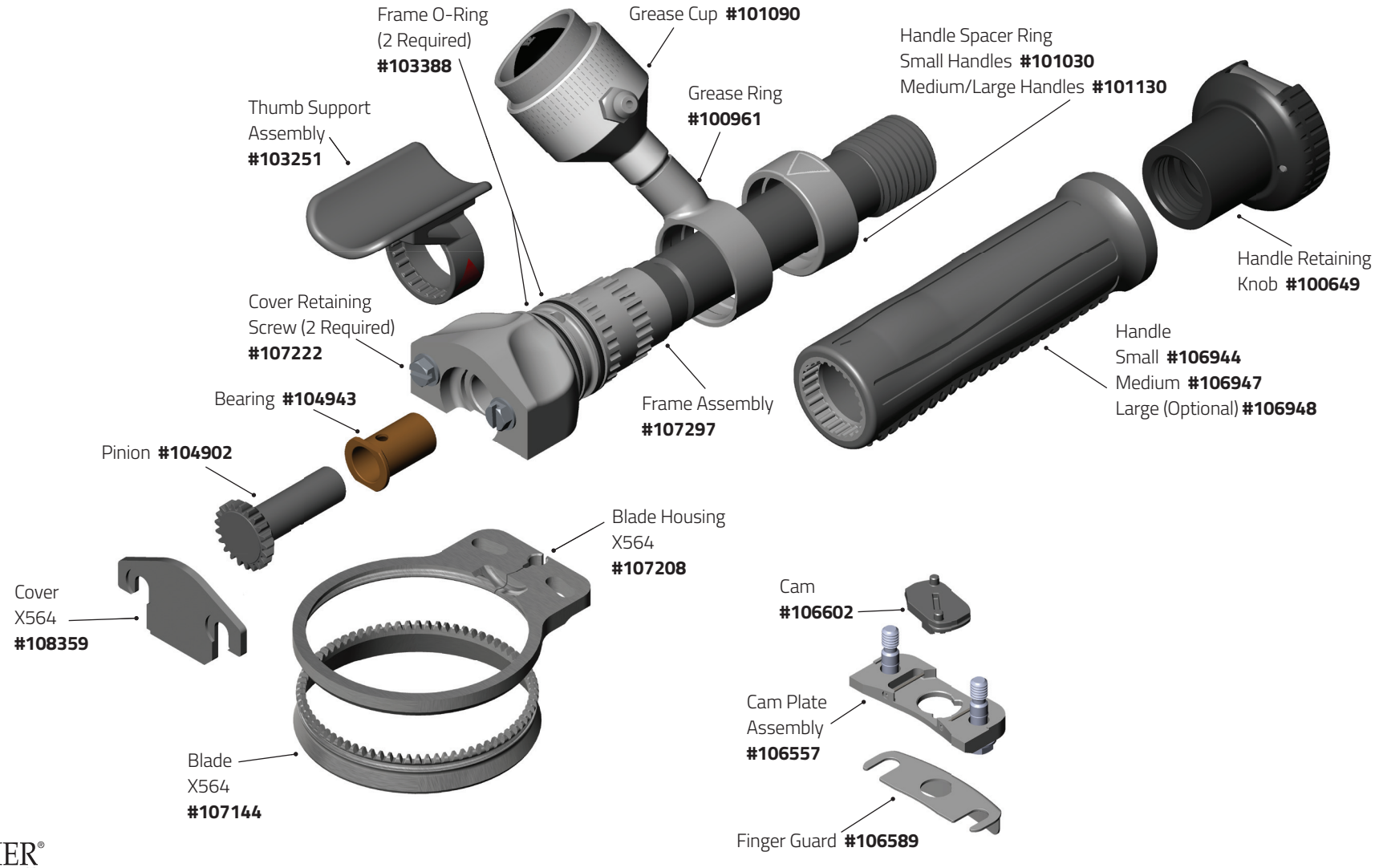

BETTCHER® Industries, Inc.

bettcher.com/support

Quantum Flex and the Bettcher design are trademarks of Bettcher Industries, Inc. U.S. and international patents. ©2020 Bettcher Industries, Inc.