Quantum Flex® X1300/X1400

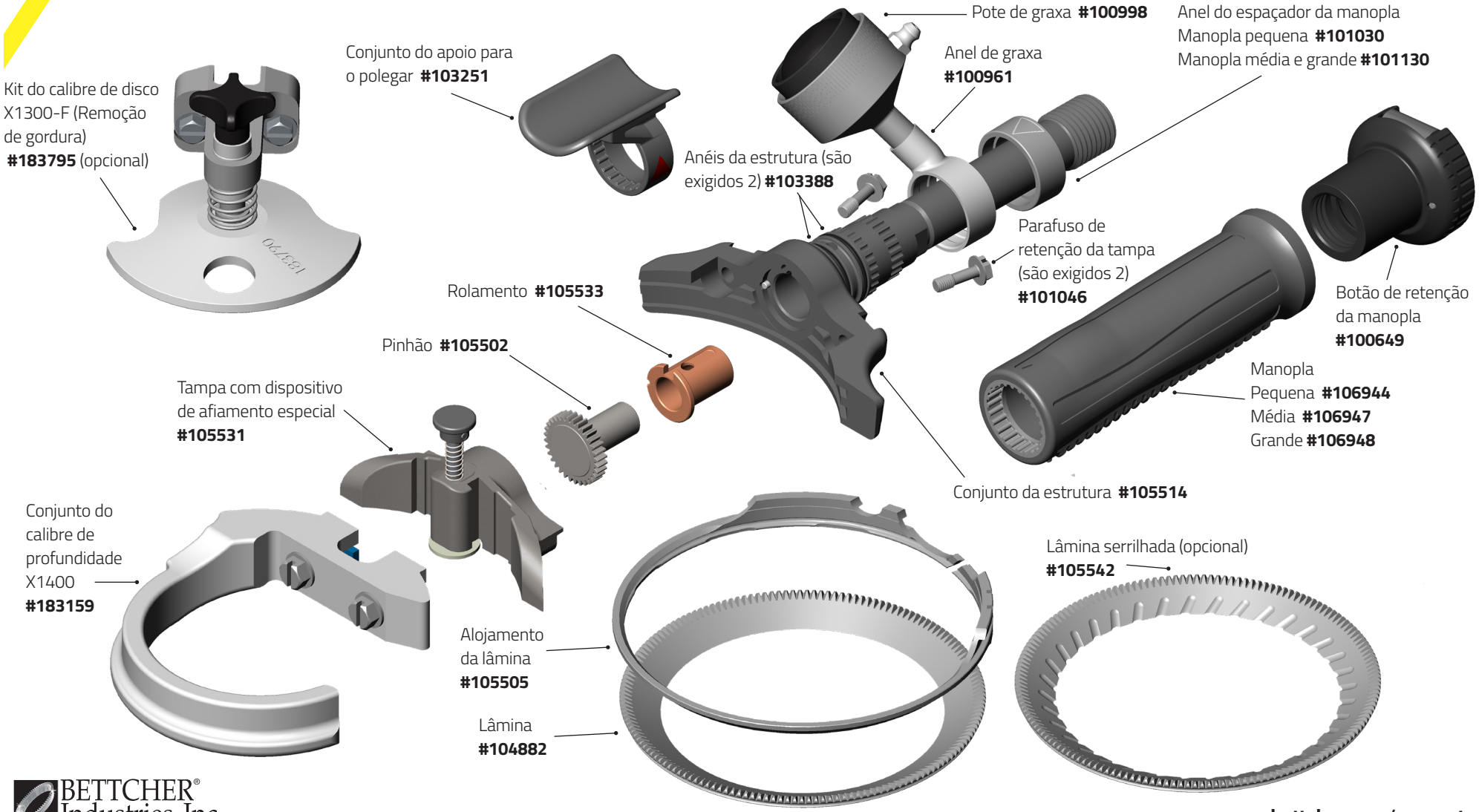

BETTCHER® Industries, Inc.

bettcher.com/support

Quantum Flex e o design Bettcher são marcas registradas das patentes da Bettcher Industries, Inc. EUA e internacionais. ©2018 Bettcher Industries, Inc.