WHIZARD QUANTUM AIR Q1000/Q1500 Air

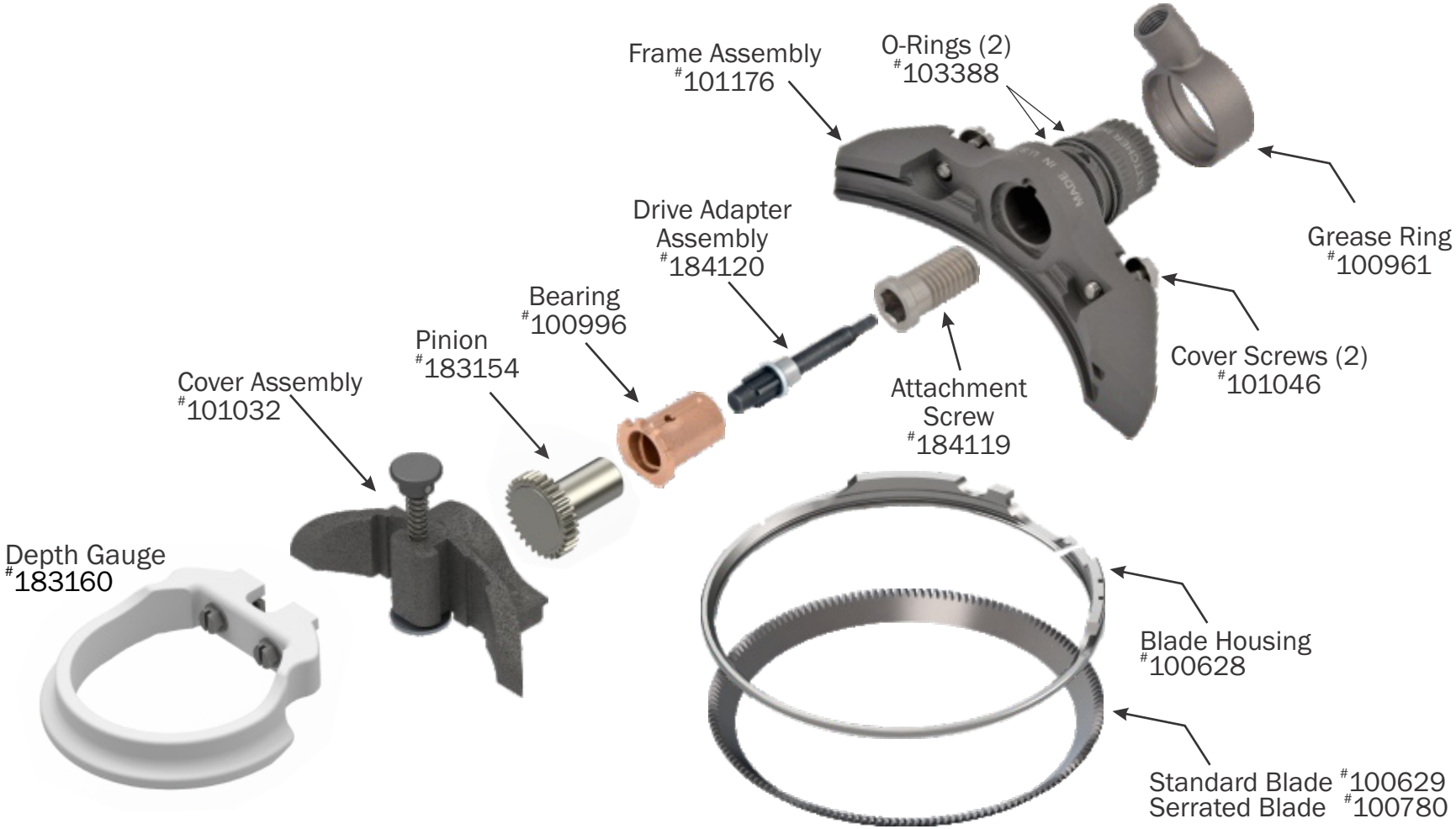

BETTCHER® Industries, Inc.

Please review Operating Instructions for complete instructions and safety information.

Order: 800-321-8763 | Fax: 440-328-4535 | service@bettcher.com